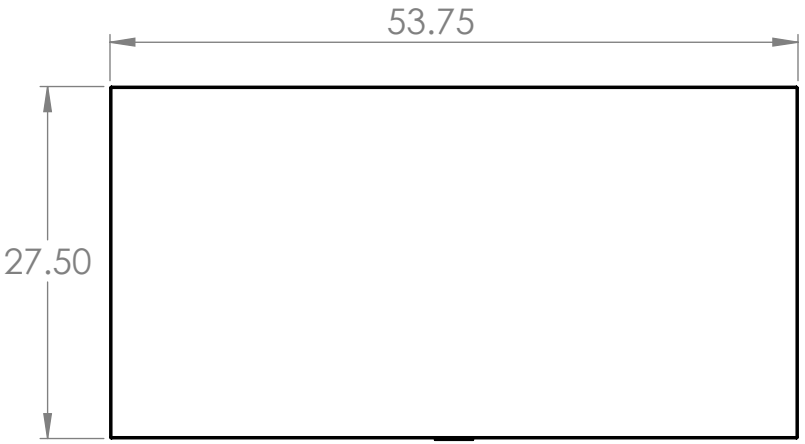

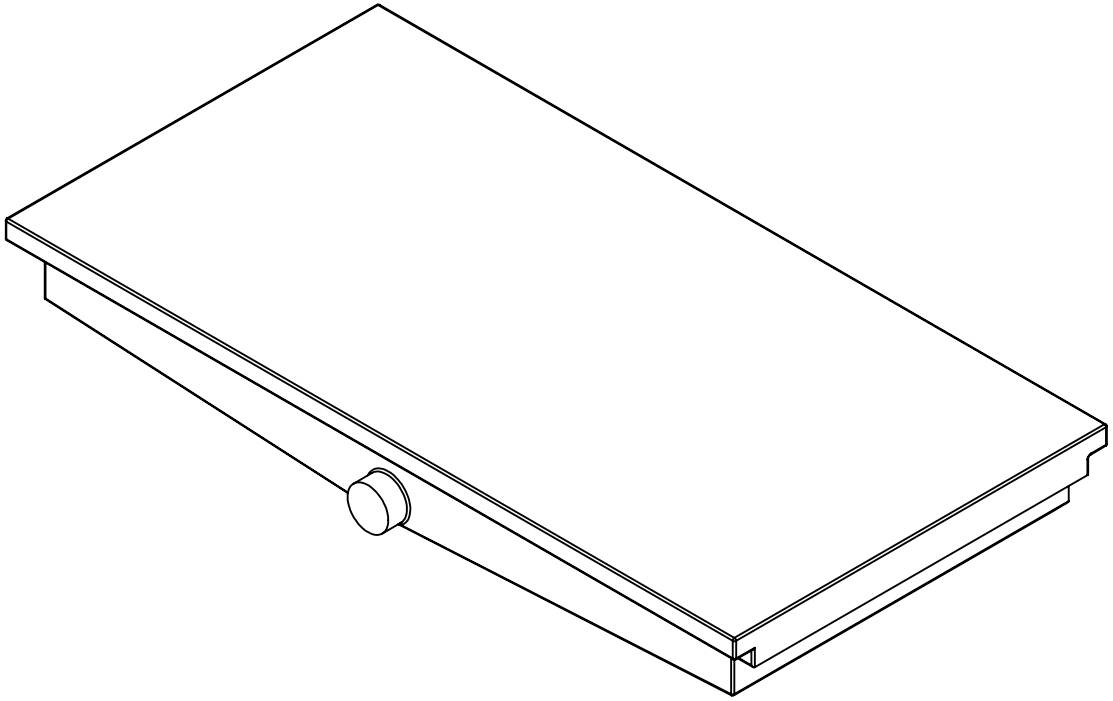

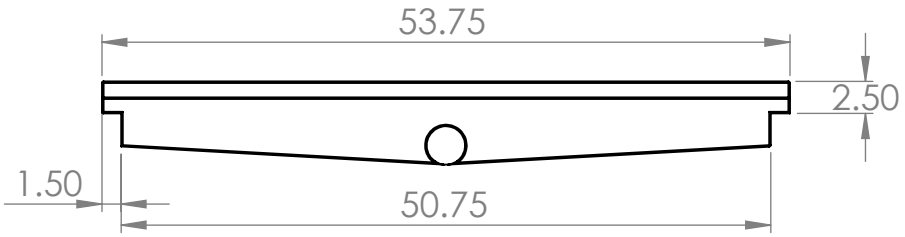

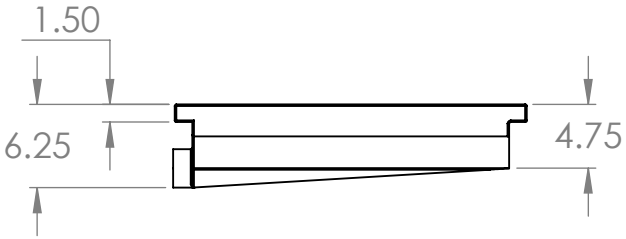

NOTES:
1.) WATER AND HOLDING TANK CAPACITIES ARE APPROXIMATE.
2.) FITTING POSITION AND SHRINK CAN CHANGE CAPACITY.
3.)DIMENSIONS ARE IN INCHES
TOLERANCES: +/- 1/4"
4.) ALL DIMENSIONS ARE REFERNCE ONLY.
5.) TANK IDENTIFIED W/LOGO.

ALPHA		
PART #: 210002		
SIZE A	MATERIAL: POLYETHYLENE **GALLON CAPACITY:** 31	REV
SCALE: NTS	DATE: 11/11/17	SHEET 1 OF 1

5 4 3 2 1